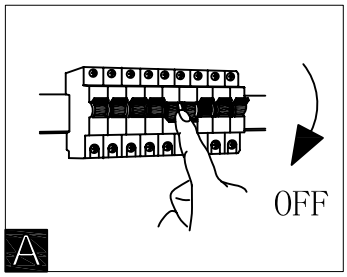
OFF
A

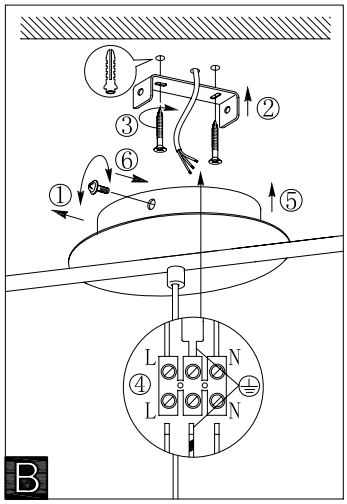
①
②
③
④
⑤
⑥
L
N
L
N
B

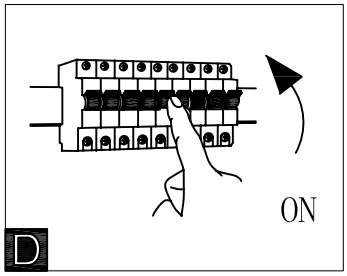
ON
D

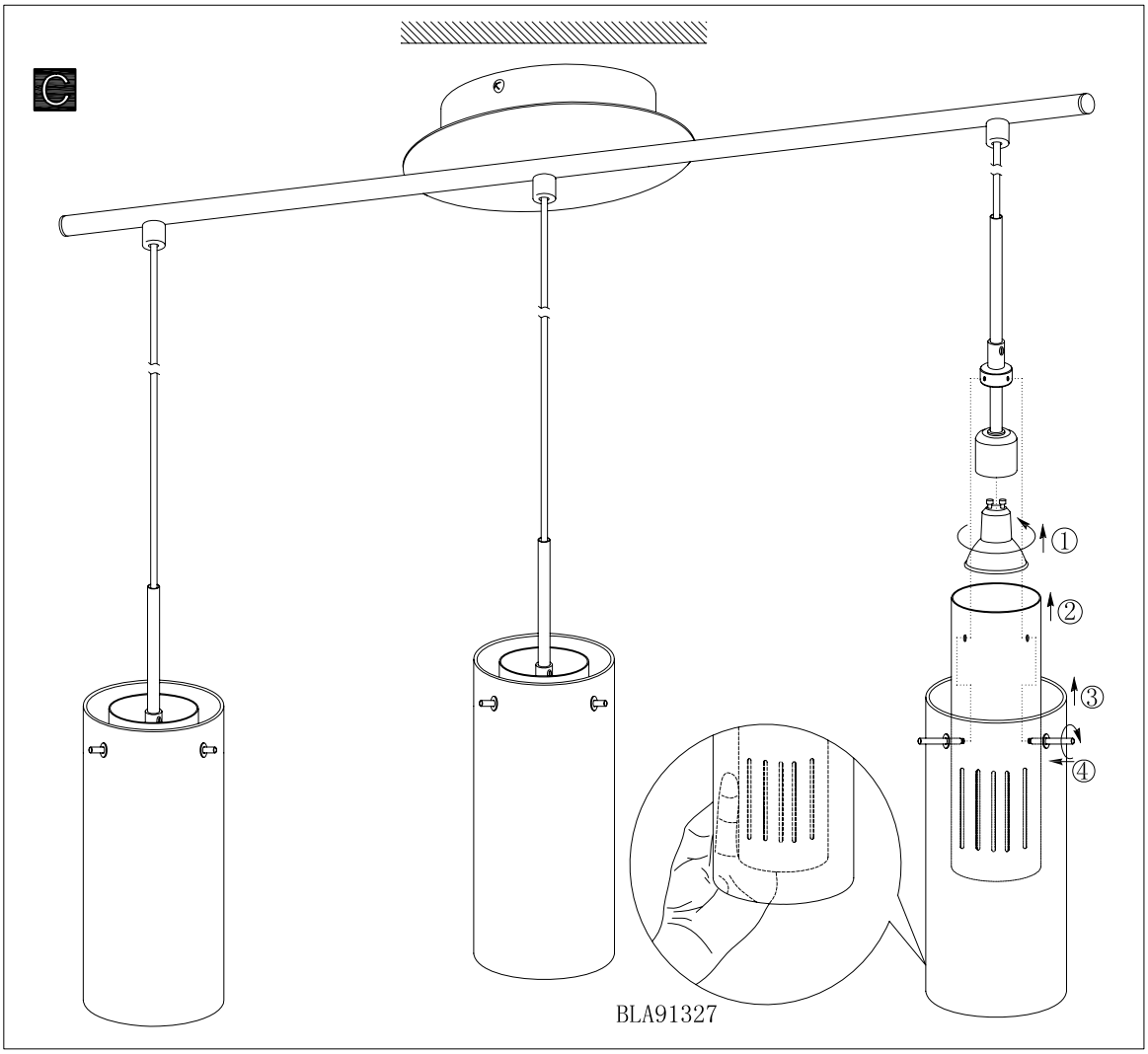
C
①
②
③
④
BLA91327